REV.	MODIFICATION.	DATE	DRN
01	CO2010267	24/09/08	SF
02	CO2010790	26/08/09	PH

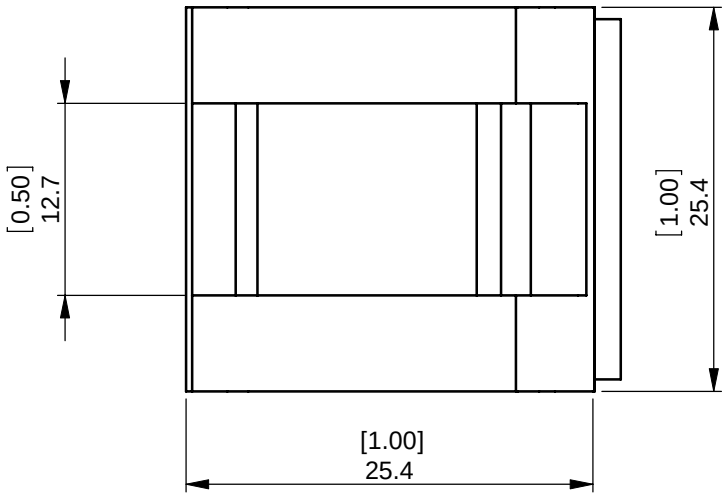

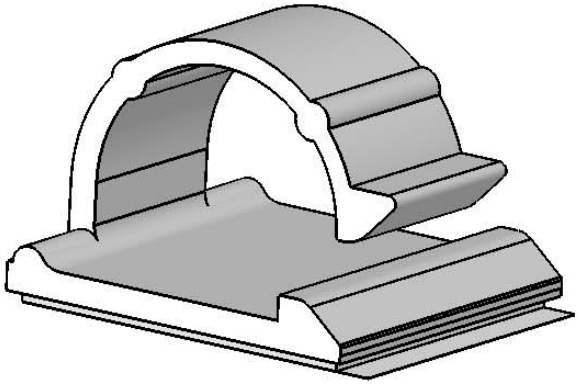

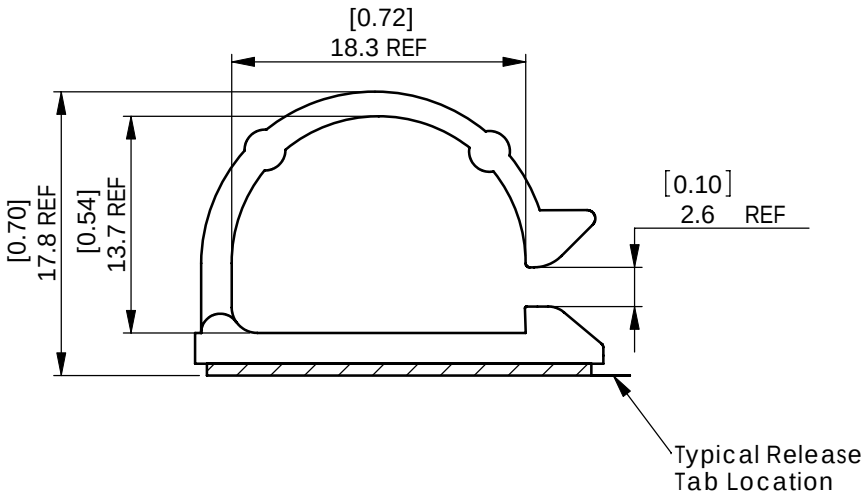

ALTERNATE UNITS FOR REFERENCE ONLY

NOTES:
1. NYLON 6/6 UL94 V-0 (RMS-19), AVAILABLE BY SPECIAL ORDER ONLY. TO ORDER REPLACE SUFFIX "01" WITH "19".
2. 0.8 [1/32"] THICK DOUBLE SIDED ACRYLIC ADHESIVE (RMS-324)
3. AVAILABLE 'WITHOUT' TAPE BY SPECIAL ORDER ONLY. TO ORDER REMOVE SUFFIX "A4-RT"

INFORMATION CONTAINED IN THIS DOCUMENT IS CONFIDENTIAL TO RICHCO INTERNATIONAL Co. Ltd. AND MAY NOT BE DISCLOSED OR REPRODUCED IN WHOLE OR PART WITHOUT THEIR WRITTEN CONSENT.

RICHCO, INC.
WWW.RICHCO-INC.COM

ALL DIMENSIONS IN mm
GENERAL TOLERANCES ±0.25
UNLESS OTHERWISE STATED
1 DECIMAL PLACE ±
2 DECIMAL PLACES ±
ANGULAR ±1°

THIRD ANGLE

MATERIAL: Nylon 6/6 UL94 V-2 (RMS-01)	COLOUR: Natural
DESCRIPTION: WIRE CORD KLIP	PART No: WCK-720-01A4-RT
DRG No: 08-099 / NPR No: XXXX-XXX	SHEET SIZE A4

DRN	DATE	CHKD	DATE	SCALE	SHEET No.
SF	24/09/08	TC	24/08/09	NTS	1 OF 1

FORM No. 0143/00